bit TAKE-OFF

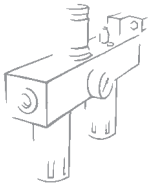

• The air take-off takes air from the SKILLAIR® FRL unit irrespective of the assembly position.
• It is necessary when air needs to be taken from the FRL unit at any stage of the treatment (normal, filtered, regulated, lubricated, etc.).

TECHNICAL DATA		PA
Maximum operating pressure	MPa	1.3
	bar	13
	psi	188
Maximum working temperature at	°C	50
at 1 MPa; 10 bar; 145 psi	°F	122

CONNECTION DIAGRAMS AND APPLICATION

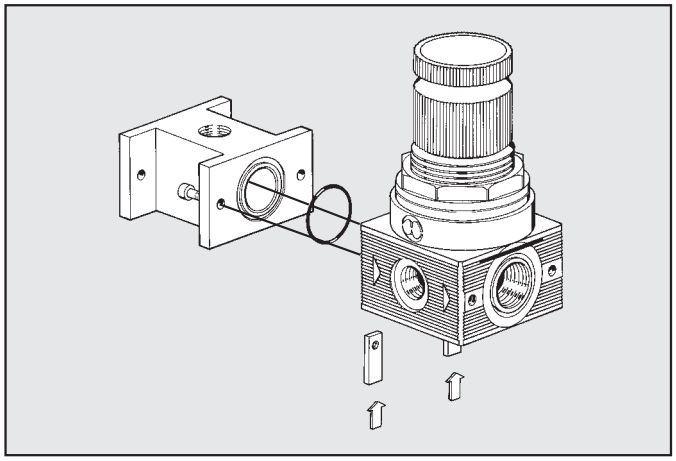

Mounting the air take-off at the inlet: only use two screws and the O-rings supplied in the PA kit.

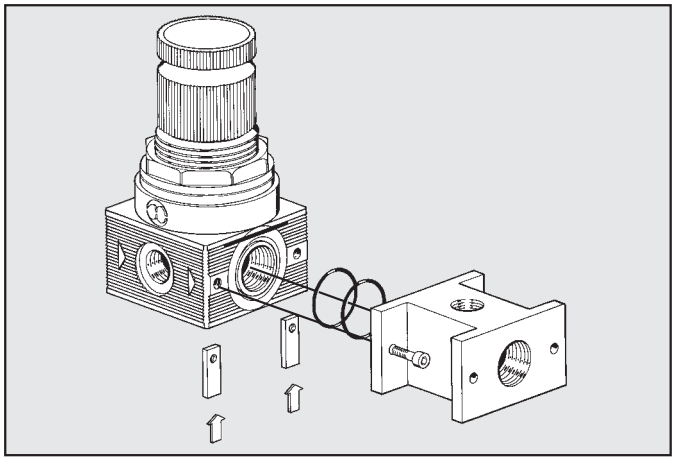

Mounting the air take-off at the outlet: only use two screws and the O-rings supplied in the PA kit. Seal is provided by the contact between O-rings.

DIMENSIONS

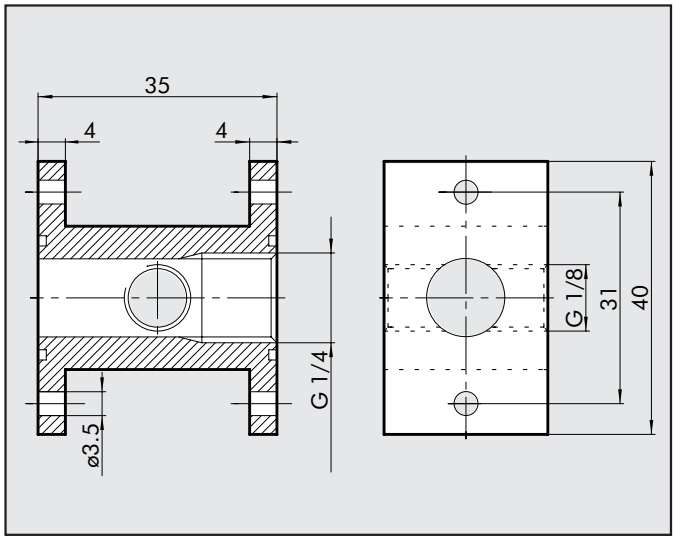

ORDERING CODES

Code	Description
9100401	PA 1/8 - 1/4 BIT