GRIPPERS WITH 2 HINGED JAWS – SERIES P7

Hinged grippers with 30° opening angle.
Bores 16, 20, 32 and 50 mm.
All grippers are magnetic with slots in the body with retracting sensors.

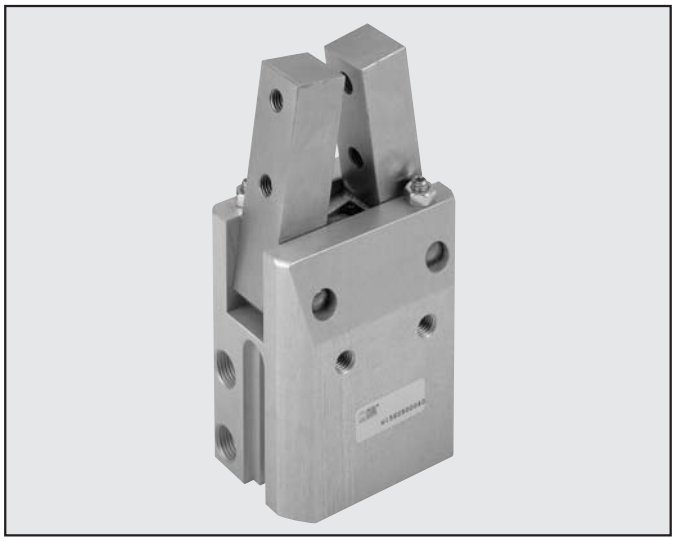

TECHNICAL FEATURES		P7 - 16	P7 - 20	P7 - 32	P7 - 50
Clamping force at 6 bar		30N (L*=15 mm)	55N (L*=15 mm)	105N (L*=25 mm)	225N (L*=30mm)
Weight	kg	0.12	0.19	0.5	1.6
Operating pressure	bar	1.5÷10	2÷10	2÷10	1÷10
Fluid		Lubricated or unlubricated filtered air; if used, it must be continuous.			
Temperature range		+5°C to 70°C	+5°C to 70°C	+5°C to 70°C	+5°C to 70°C
Materials		Anodized aluminium body: NBR/polyurethane seal			
		*L = length of clamping finger			

DIMENSIONS OF GRIPPERS P7-16

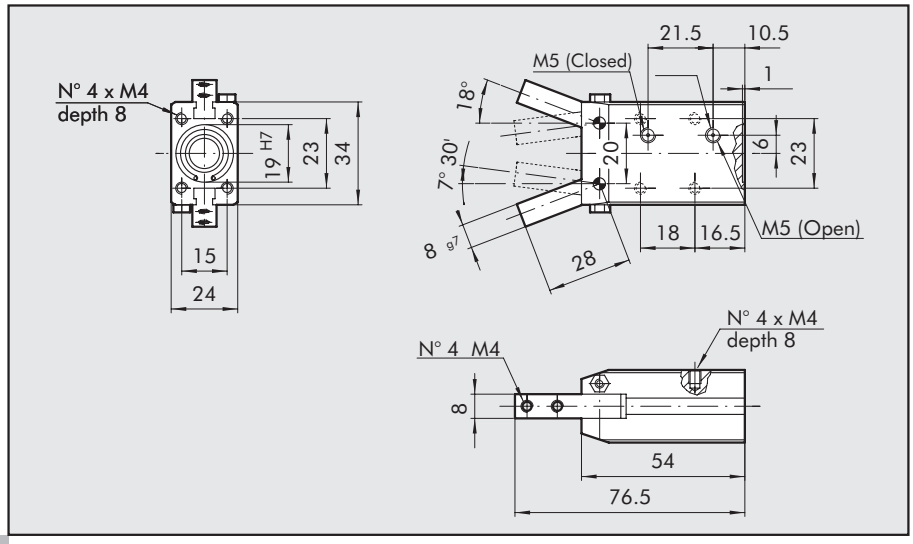

ORDERING CODES

Code	Description
W1590160200	GRIPPER WITH 2 HINGED JAWS P7-16

DIMENSIONS OF GRIPPERS P7-20

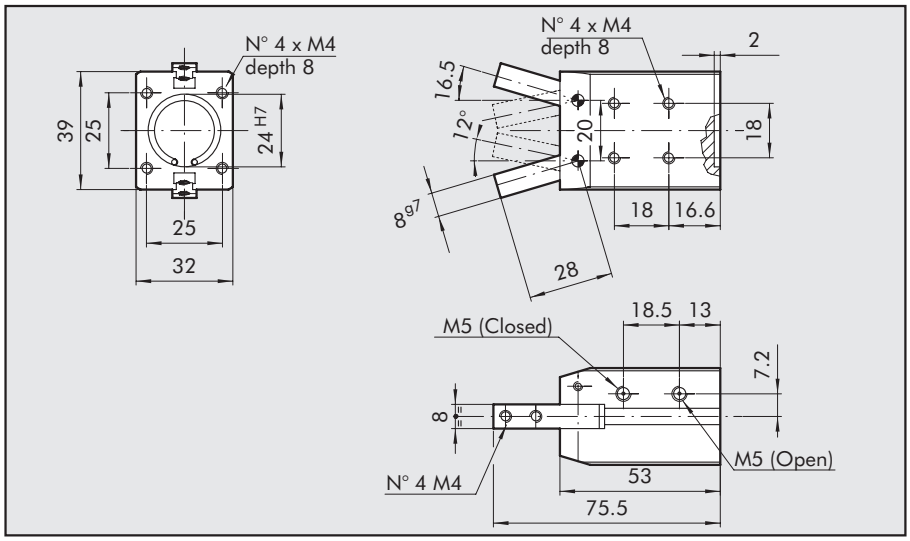

ORDERING CODES

Code	Description
W1590200200	GRIPPER WITH 2 HINGED JAWS P7-20

DIMENSIONS OF GRIPPERS P7-32

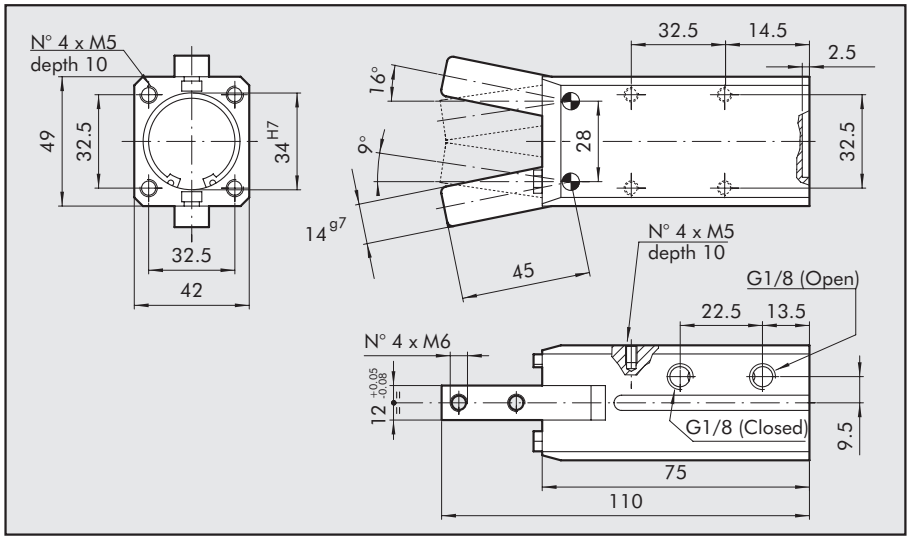

ORDERING CODES

Code	Description
W1590320200	GRIPPER WITH 2 HINGED JAWS P7-32

DIMENSIONS OF GRIPPERS P7-50

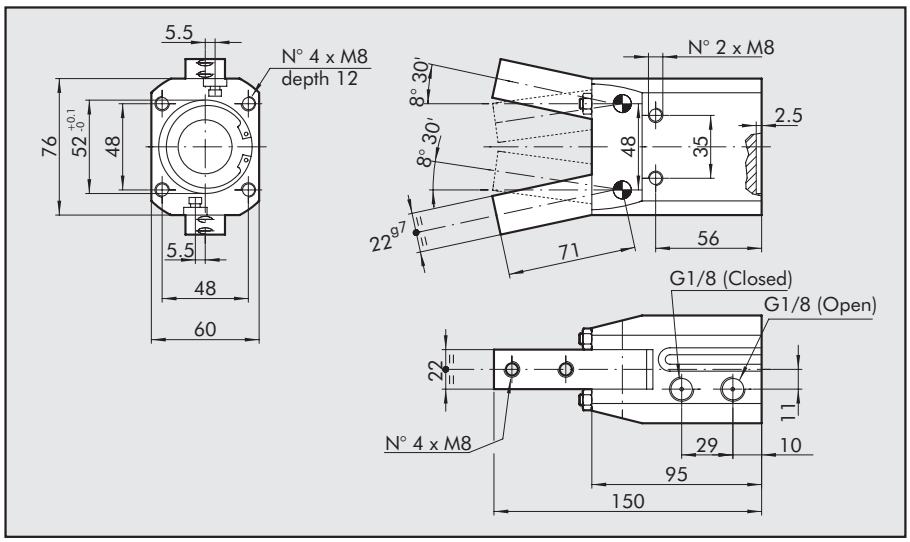

ORDERING CODES

Code	Description
W1590500200	GRIPPER WITH 2 HINGED JAWS P7-50

RETRACTABLE SENSOR WITH INSERTION FROM ABOVE

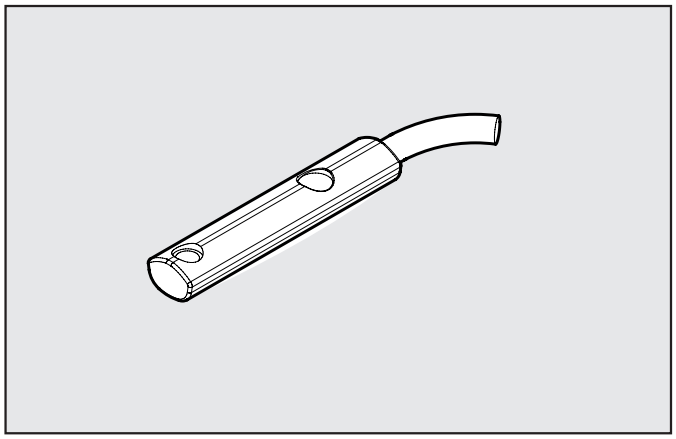

Code	Description
W0952025390	HALL N.O. SENSOR, VERTICAL INSERTION 2.5m
W0952029394	HALL N.O. SENSOR, VERTICAL INSERTION 300 mm M8
W0952022180	REED N.O. SENSOR, VERTICAL INSERTION 2.5m
W0952028184	REED N.O. SENSOR, VERTICAL INSERTION 300 mm M8
W0952125556	HALL N.O. SENSOR, VERTICAL INSERTION 2m ATEX

WIRING DIAGRAM

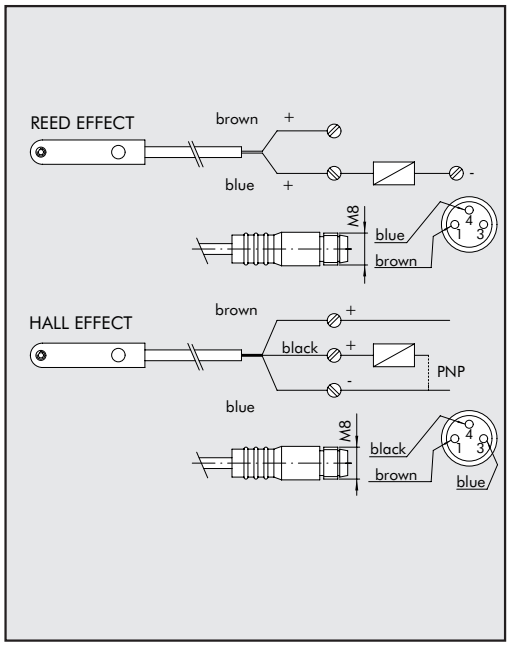

TECHNICAL DATA

		Reed	Effetto Hall	ATEX Effetto Hall
Type of contact		N.O.	N.O.	N.O.
Switch		-	PNP	PNP
Supply voltage (Ub)	V	10 ÷ 30 AC/DC	10 ÷ 30 DC	18 ÷ 30 DC
Power	W	3 (peak valve=6)	3	≤ 1.7
Voltage variation		-	≤ 10% di Ub	≤ 10% di Ub
Voltage drop	V	-	≤ 2	≤ 2.2
Input current	mA	-	≤ 10	≤ 10
Output current	mA	≤ 100	≤ 100	≤ 70
Switching frequency	Hz	≤ 400	≤ 5	1000
Short-circuit protection		-	Yes	Yes
Over-voltage suppression		-	Yes	Yes
Polarity inversion protection		-	Yes	Yes
EMC		EN 60 947-5-2	EN 60 947-5-2	EN 60 947-5-2
LED display		Yellow	Yellow	Yellow
Magnetic sensitivity		2,8 mT ±25%	2,8 mT ±25%	2.6
Repeatability		≤ 0,1 mT	≤ 0,1 mT	≤ 0,1 (Ub and ta fixed)
Degree of protection (EN 60529)		IP 67	IP 67	IP 68, IP 69K
Vibration and shock resistance		30 g, 11 ms, 10÷55 Hz, 1mm	30 g, 11 ms, 10÷55 Hz, 1mm	30 g, 11 ms, 10÷55 Hz, 1mm
Temperature range	°C	-25 ÷+75	-25 ÷ +75	-20 ÷ +45
Sensor capsule material		PA66 + PA6I/6T	PA66 + PA6I/6T	PA
2.5m/2m connecting cable		PVC; 2 x 0,12 mm^2	PVC; 3 x 0,14 mm^2	PVC; 3 x 0,12 mm^2
Connecting cable with M8x1		Polyurethane; 2 x 0,14 mm^2	Polyurethane; 3 x 0,14 mm^2	-
Wire NO.		2	3	3

NOTES